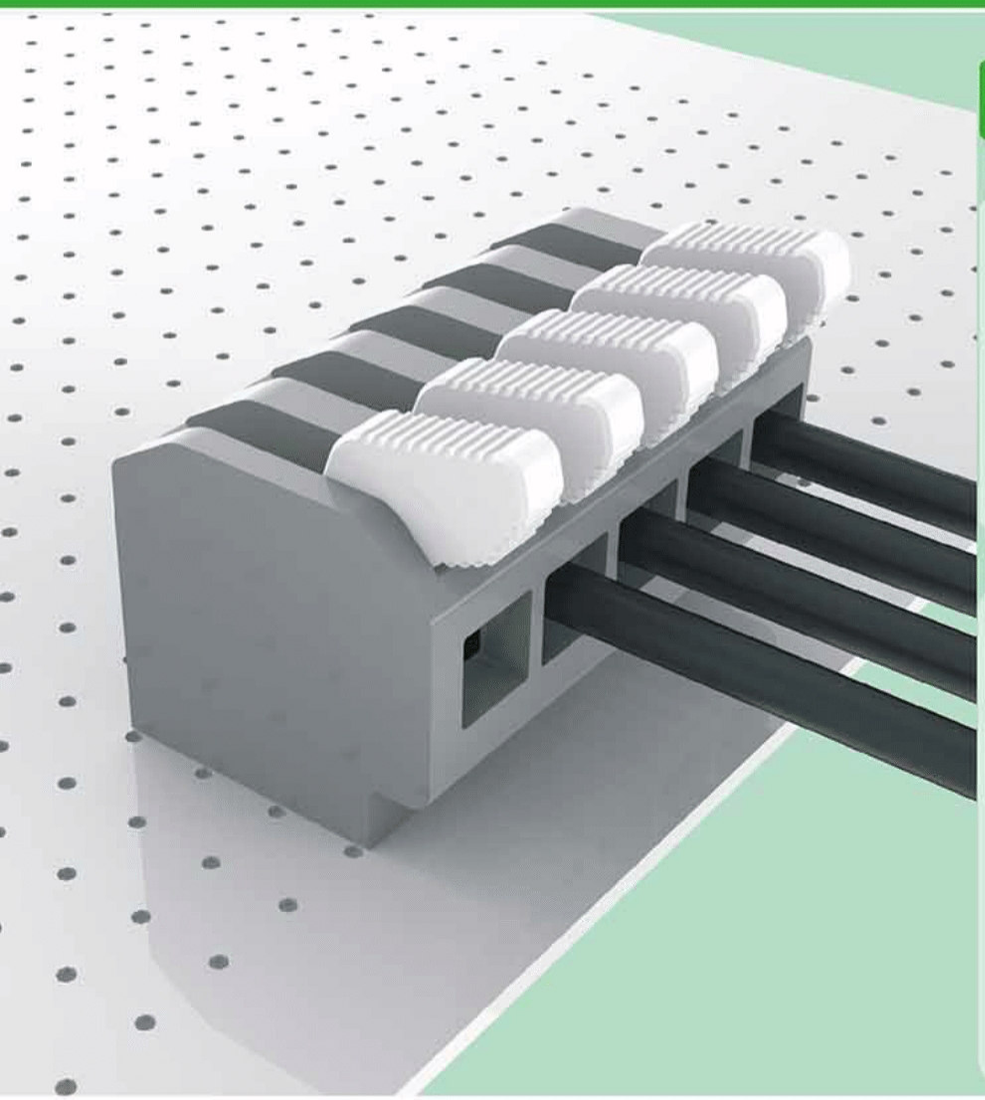

DG213-5.0

- PUSH IN 弹簧式连接技术；
- 按扭带限位功能，实现单手操作进、取线；
- Push-in technology
- Push button with limit function, inserting and pulling out wire can be done with single hand.

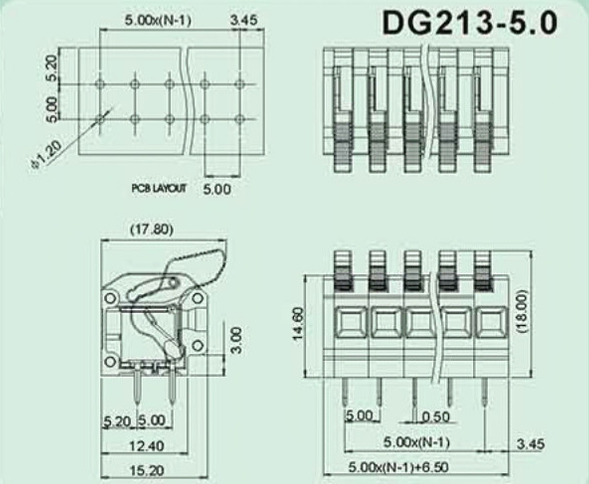

技术参数 Technical data

APPROVAL: CE

型号 Model	线径 Wire range (AWG/mm²)	线数 Poles	IEC60947技术参数 (IEC60947 data sheet)		UL1059技术参数 (UL1059 data sheet)	
			电压(V) Rated voltage	电流(A) Rated current	电压(V) Rated voltage	电流(A) Rated current
DG213-5.0	0.2-2.5/28-12	01-12P	450	15	300	12

应用行业 Application

工业自动化，仪器仪表，新能源，电梯，电力电气，照明，安防，电源等行业。

industrial automation,instrument,new energy,elevator,electric power,lighting,security power supply.

型号对照 Cross reference

DEGSON	同行1/Competitor1	同行2/Competitor2
DG213-5.0	-	-

产品订货 How to order

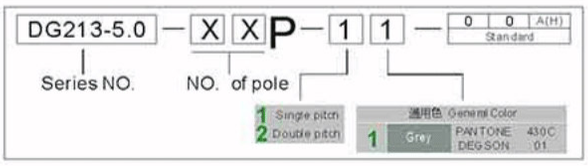

产品包装方式 Packing

Product model	Pcs./Pkt.	Product model	Pcs./Pkt.
DG213-5.0-01P	50	DG213-5.0-07P	50
DG213-5.0-02P	50	DG213-5.0-08P	50
DG213-5.0-03P	50	DG213-5.0-09P	50
DG213-5.0-04P	50	DG213-5.0-10P	50
DG213-5.0-05P	50	DG213-5.0-11P	50
DG213-5.0-06P	50	DG213-5.0-12P	50

地址：中国宁波慈溪市逍林大道1585号
Add：No.1585.Xiaolin Road.Cixi.Ningbo China
Tel：+86-574-63504333 Fax：+86-574-63512345 E-mail：sale@degson.com www.degson.com